REVISIONS					
REV.	DESCRIPTION	ECO	DATE	DRAFTER	APPROVED
PR	OEM DRAWING RELEASE		6.25.08	DA	BT

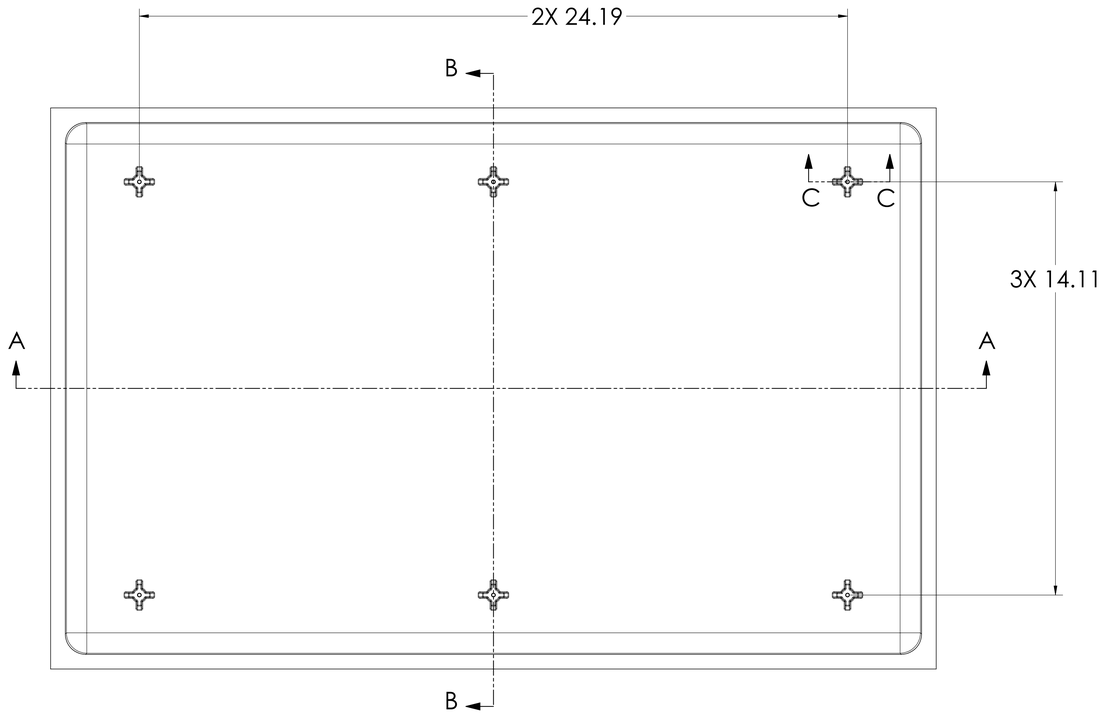

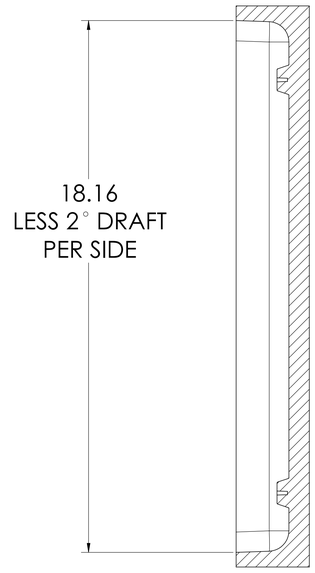

SECTION B-B

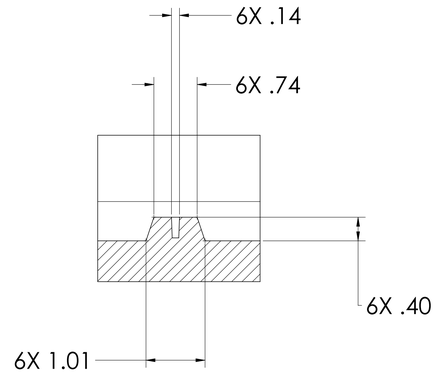

SECTION C-C
SCALE 1 : 1

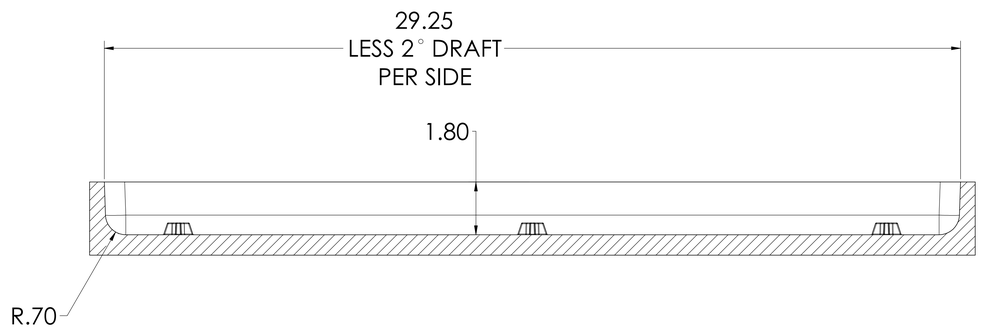

SECTION A-A

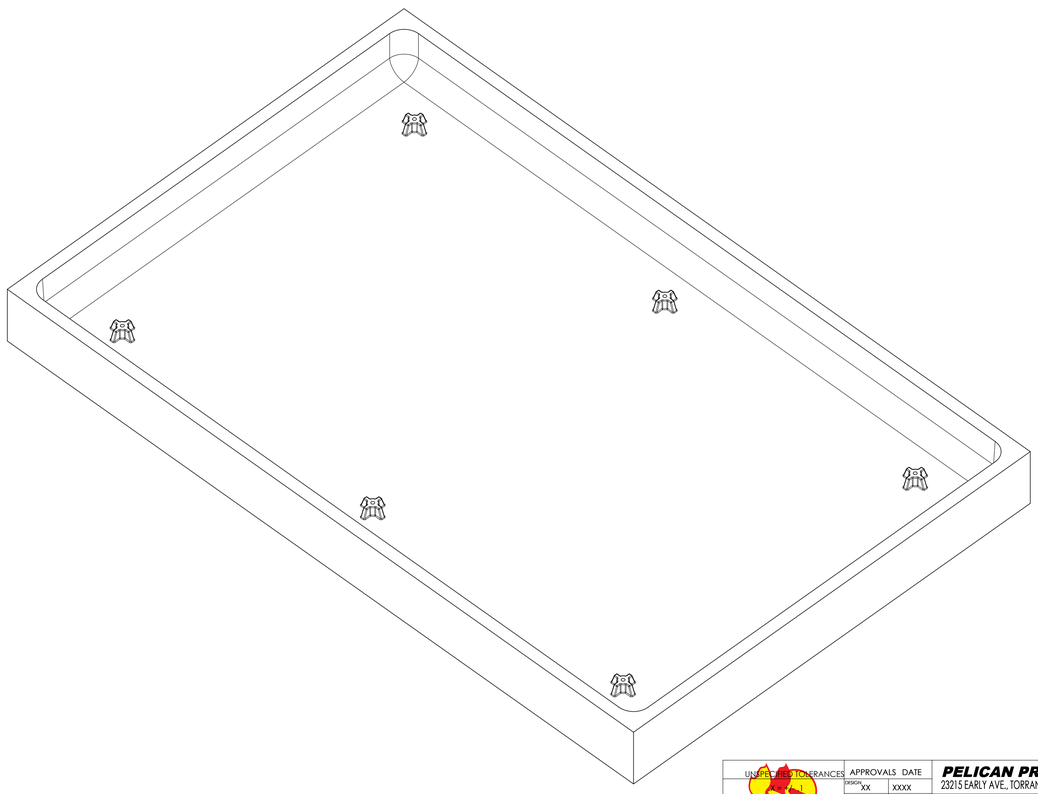

ALL DIMENSIONS ARE TO INTERNAL GEOMTERY OF CASE.

NOTES: UNLESS OTHERWISE SPECIFIED.

UNSPECIFIED TOLERANCES
XX ± 1/32 .XX ± .010
PELICAN
You break it, we replace it... forever.
This Drawing contains information that is owned by Pelican Products Inc. Any reproduction or distribution of this drawing without written permission of Pelican Products Inc.

APPROVALS	DATE
DESIGN XX	XXXX
CHECKED	
APPROVED	

PELICAN PRODUCTS INC.
23215 EARLY AVE., TORRANCE, CA 90505 (310) 326-4700

TITLE
1650 CASE TOP,
INTERNAL GEOMETRY

SIZE	SCALE	DRAWING NO.	REV
E	1:2	1652-931T-CLR	PR

DO NOT SCALE DRAWING
SHEET 1 OF 1

1652-931T-CLR 00