REVISIONS					
REV.	DESCRIPTION	ECO	DATE	DRAFTER	APPROVED
PR	OEM DRAWING RELEASE		6.25.08	DA	BT

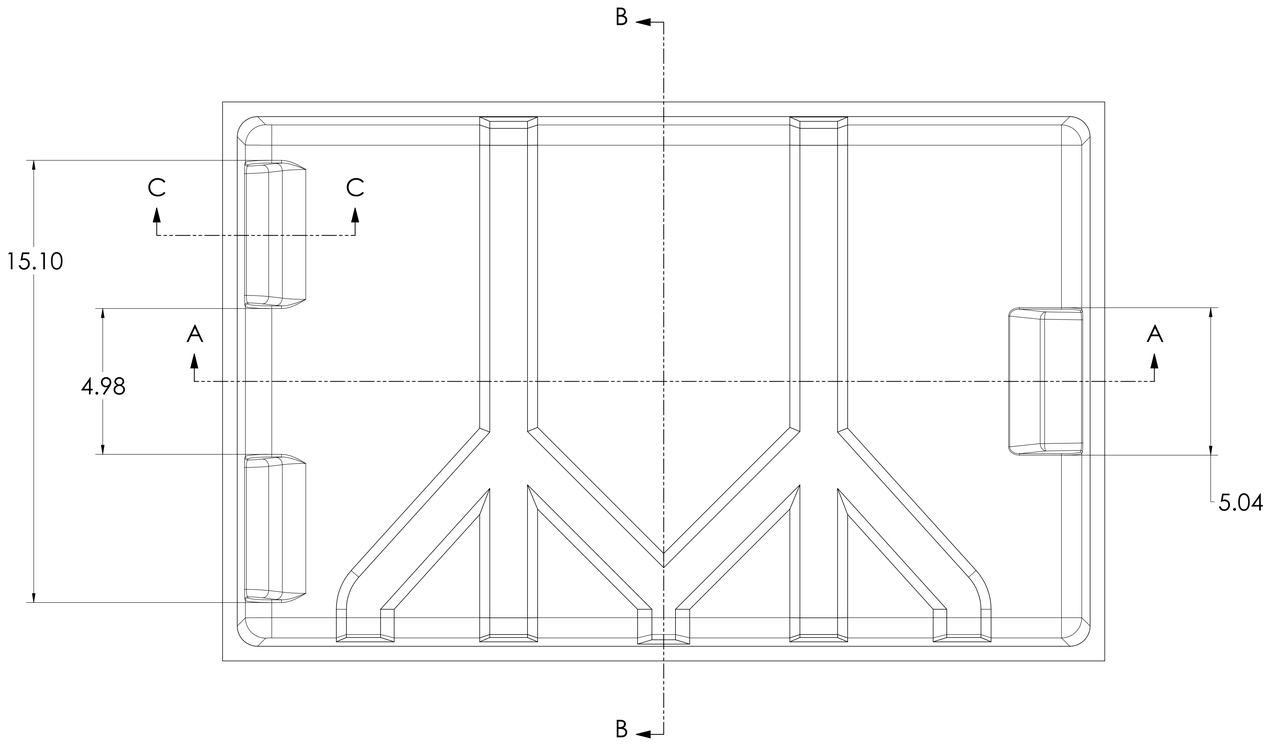

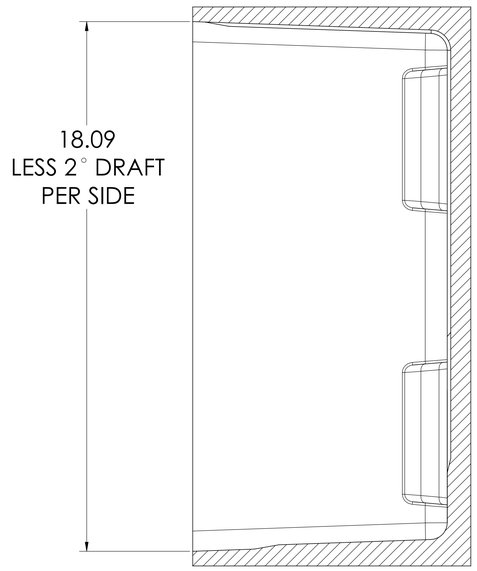

SECTION B-B

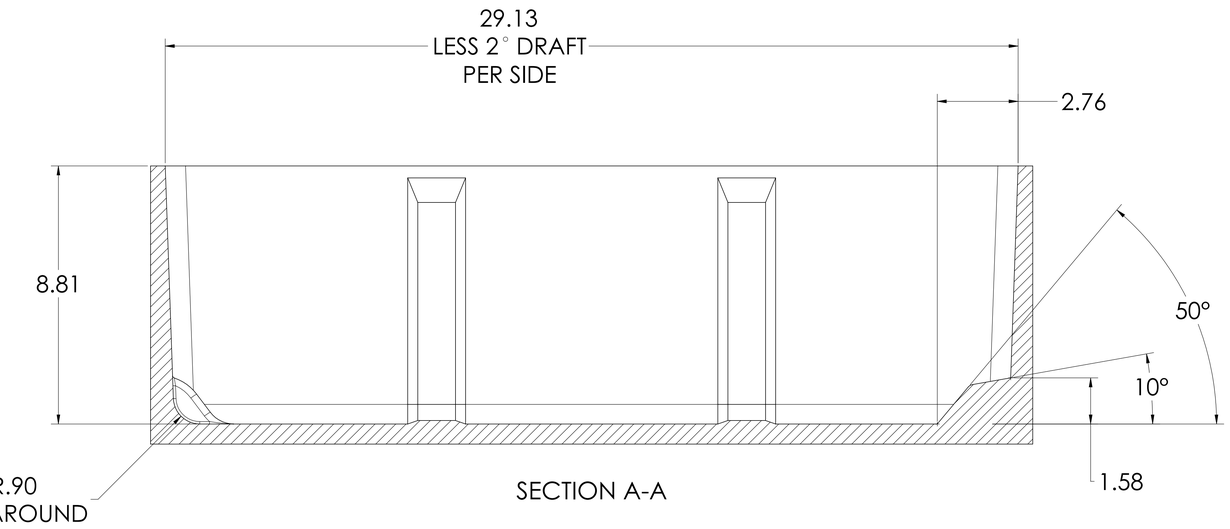

SECTION A-A

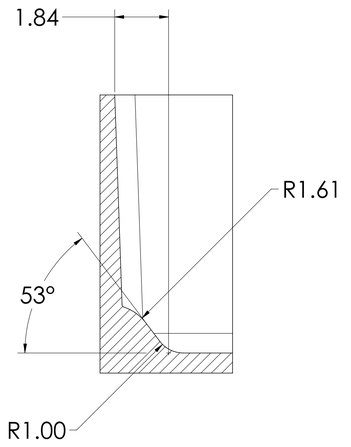

SECTION C-C

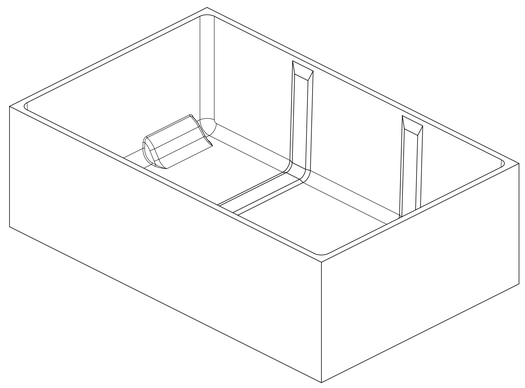

ALL DIMENSIONS ARE TO INTERNAL GEOMTERY OF CASE.

NOTES: UNLESS OTHERWISE SPECIFIED.

UNSPECIFIED TOLERANCES	APPROVALS	DATE
	DESIGN XX	XXXX
	CHECKED	
	APPROVED	

PELICAN™ You break it, we replace it... forever.

This Drawing contains information The Drawing contains information proprietary to Pelican Products Inc. Any reproduction, distribution, or use of this drawing without written permission of Pelican Products Inc.

PELICAN PRODUCTS INC.
23215 EARLY AVE., TORRANCE, CA 90505 (310) 326-4700

TITLE: 1650 CASE BOTTOM, INTERNAL GEOMETRY

SIZE	SCALE	DRAWING NO.	REV
E	1:2	1652-931B-CLR	PR

DO NOT SCALE DRAWING — SHEET 1 OF 1

1652-931B-CLR 00